Embedded Systems
Analog Electronics

Units

physical units = length [meter], mass [kilogram], time [second]

force - [Newton]: kg m/s^2 (F=ma)
torque - [N m]
energy - [joule]: 1N acting through distance of 1m
- [calorie]: raise the temperature of 1 gram of water by 1 degree centigrade
power - [Watts]: energy rate of 1 joule/sec
charge - [coulomb]: -1(charge of 0.624142 x 10^{19}) electrons
current - [Amperes]: 1 coulomb/sec
voltage - [Volts]: 1 joule of energy is required to push 1 coulomb up a 1 volt potential difference

Terminology

conductor - materials (metals) with a crystalline structure with loosely bound electrons in the (outer) valence shell donate electrons to the lattice easily

insulators - materials with tightly bound electrons in the valence shell

semiconductors - a material whose conductivity can be controlled

Circuit Analysis Tools

Kirchoff's Current Law - the sum of the current flowing into a junction is zero (conservation of electrical charge)

$$I_1 + I_2 + I_3 + I_4 = 0$$

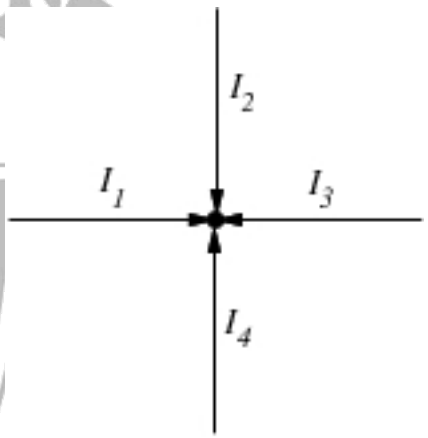

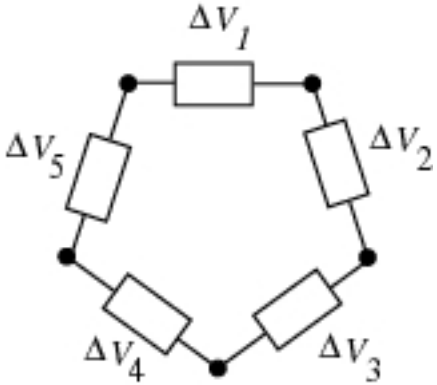

$$\Delta V_1 + \Delta V_2 + \Delta V_3 + \Delta V_4 + \Delta V_5 = 0$$

Kirchoff's Voltage Law - the sum of the voltages around any closed circuit is zero

Resistors

resistance - [Ohms, Ω]: a resistance of 1 Ω permits a 1 A current flow given 1 V of electromotive potential

power dissipated in resistors - $P=VI=V^2/R=I^2R$

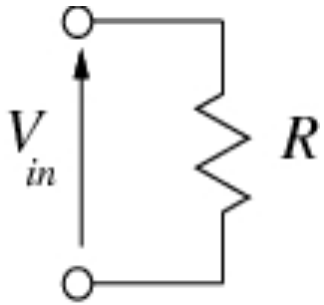

$$V = IR$$

Resistors

color	digit	multiplier	tolerance
black	0	10^0	
brown	1	10^1	1%
red	2	10^2	2%
orange	3	10^3	
yellow	4	10^4	
green	5	10^5	0.50%
blue	6	10^6	0.25%
violet	7	10^7	0.10%
grey	8	10^8	0.05%
white	9	10^9	
gold		10^{-1}	5%
silver		10^{-2}	10%
none			20%

power specs: 1/8, 1/4, 1/2, 1, 10 W

[d1 d2 exp precision]:

for example: 4700 Ω at 5%

yellow violet red gold

Resistors

series combination

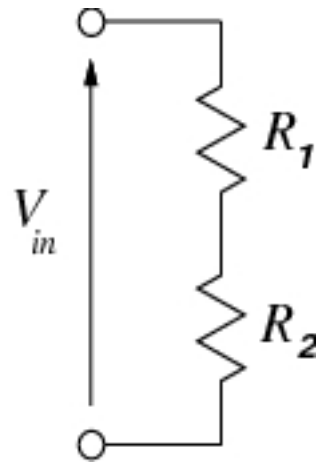

$$R_{eq} = R_1 + R_2$$

parallel combination

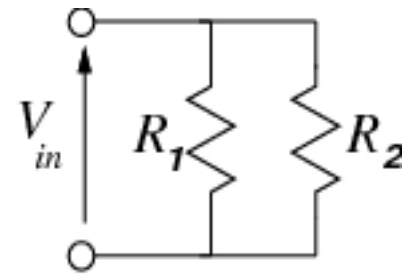

$$R_{eq} = \frac{1}{\frac{1}{R_1} + \frac{1}{R_2}}$$

Voltage Divider

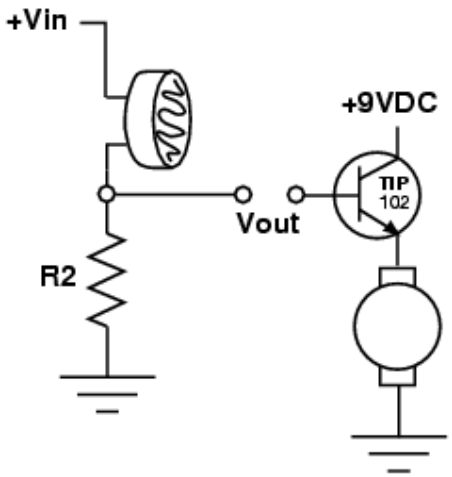

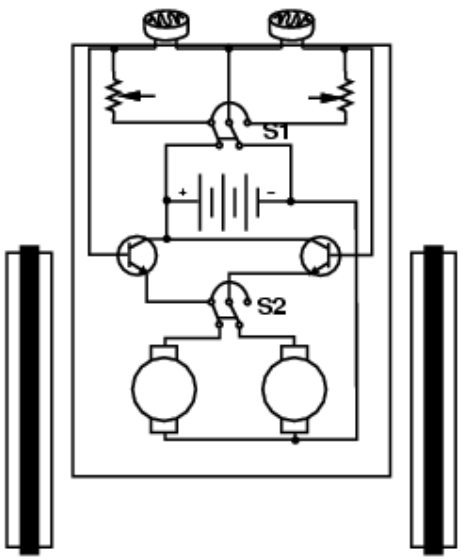

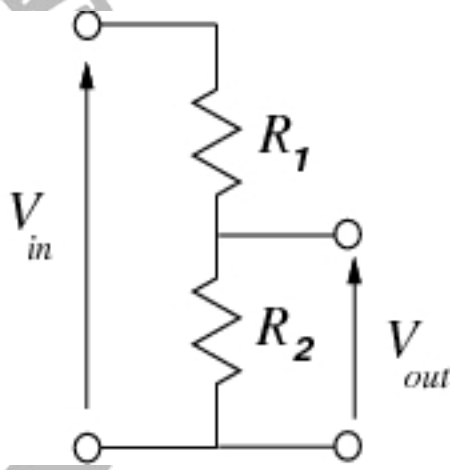

$$V_{out} = \frac{R_2}{R_1 + R_2} V_{in}$$

Capacitors

$$Q = C\ V$$

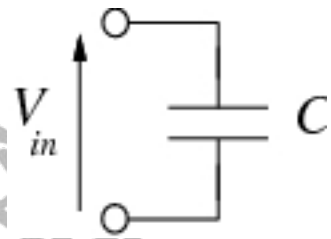

- capacitance - [Farads]: Michael Faraday
- capacitor - two terminal device that stores energy in the form of an electric charge

differentiating, we get $I = \frac{dQ}{dT} = C\frac{dV}{dt}$

- two conductors separated by a thin layer of dielectric
- capacitance ~ conductor surface area, thinness of dielectric
- two adjacent wires in a ribbon cable are subject to capacitive crosstalk (ground every other wire)
- big capacitors are *polarized*, terrible accuracy, temperature stability, leakage, and lifetime---a loud buzzing noise from electronics could be an electrolytic capacitor has died

Capacitors

series combination

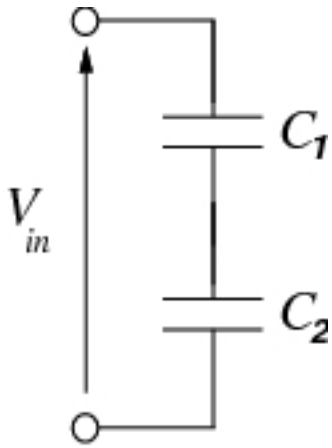

$$C_{eq} = \frac{1}{\frac{1}{C_1} + \frac{1}{C_2}}$$

parallel combination

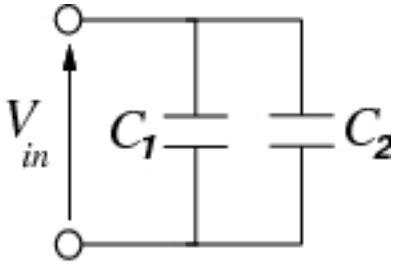

$$C_{eq} = C_1 + C_2$$

RC Circuits

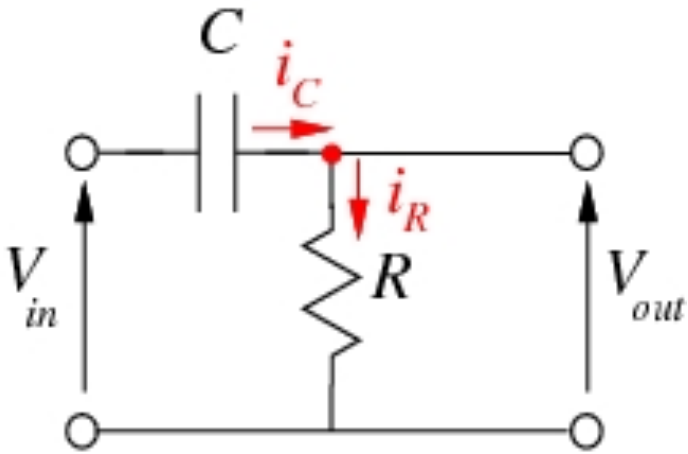

$$\sum i = 0 = i_c - i_r$$
$$= C\frac{d}{dt}(V_{in} - V_{out}) - \frac{V_{out}}{R}$$

$$-\infty \leq t < 0 \qquad V_{in} = V_0$$
$$t \geq 0 \qquad V_{in} = 0$$

and suppose that:

$$V_{out}(t) \approx V_0 exp(st)$$
$$\frac{d}{dt}V_{out}(t) \approx sV_0 exp(st)$$

$$C(-sV_0 exp(st)) - \frac{1}{R}V_0 exp(st) = 0$$

RC Circuits

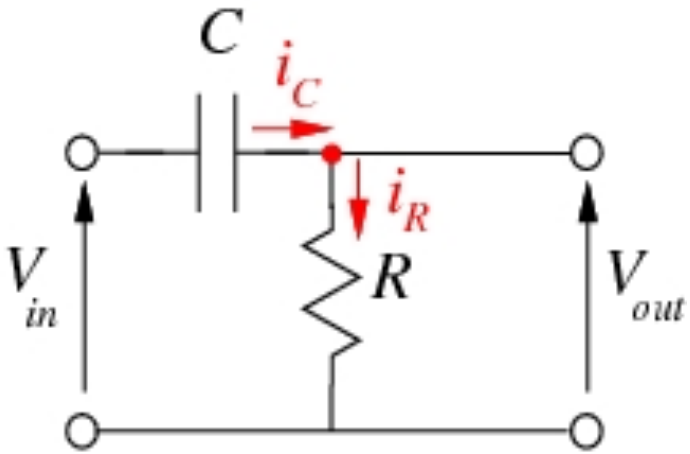

$$C(-sV_0exp(st)) - \frac{1}{R}V_0exp(st) = 0$$

$$(s + \frac{1}{RC})V_0exp(st) = 0, \text{ so that.}$$

$$s = -\frac{1}{RC} \text{ is a solution, and}$$

$$\boxed{V_{out}(t) = V_0exp(-t/RC)}$$

RC Circuits

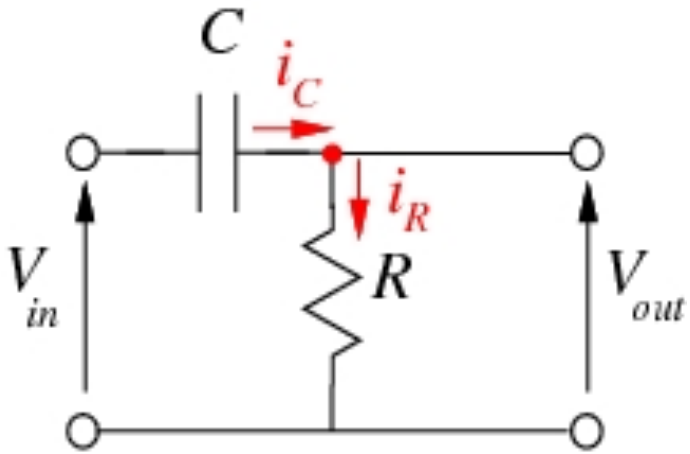

$$V_{out}(t) = V_0 exp(\frac{-t}{RC})$$

timing - RC is called the time constant, τ, of the circuit, voltage will fall to 37% of its initial value in RC seconds.

smoothing - high frequency noise on top of a slowly varying signal can be rejected by observing the signal through a relatively large RC time constant

RC Differentiator

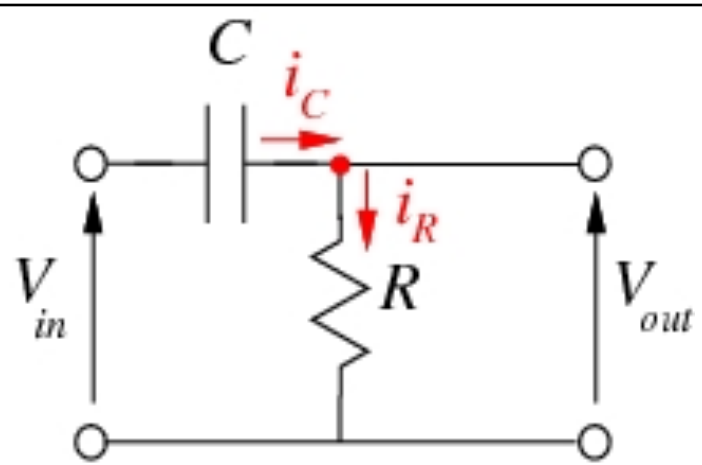

$$I = C\frac{d}{dt}(V_{in} - V_{out}) = \frac{V_{out}}{R}$$

choose R and C small so V_{out} is small

$$V_{out}(t) = RC\frac{d}{dt}V_{in}(t)$$

note - this can happen by accident, if a smooth signal is corrupted with noise, maybe it's capacitive coupling---perhaps a digital line is too close to an analog signal.

RC Integrator

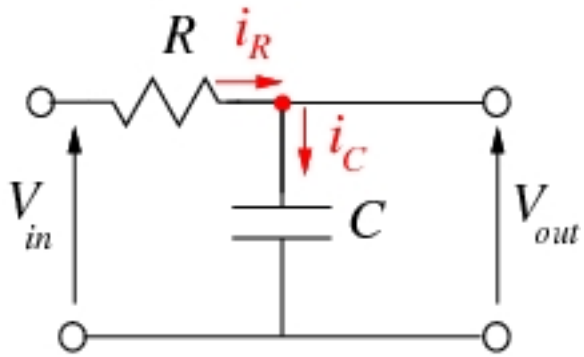

$$I = C\frac{dV_{out}}{dt} = \frac{V_{in} - V_{out}}{R}$$

choose R and C large so V_{out} is small

$$C\frac{dV}{dt} \approx \frac{V_{in}}{R}$$

$$V(t) = \frac{1}{RC}\int V_{in}(t)dt + constant$$

Inductors

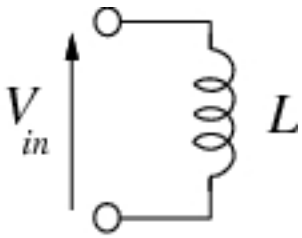

- inductance - [Henries]: 1 volt across 1 Henry produces a current that increases at 1 amp per second

$$V = L\frac{dI}{dT}$$

- an inductor is normally formed from a coil of wire that may be wound on a core of magnetic material.
- a voltage source across an inductor causes the current to rise as a ramp.
- stopping a current going through an inductor generates a high voltage.

Inductors

no mutual inductance

series combination

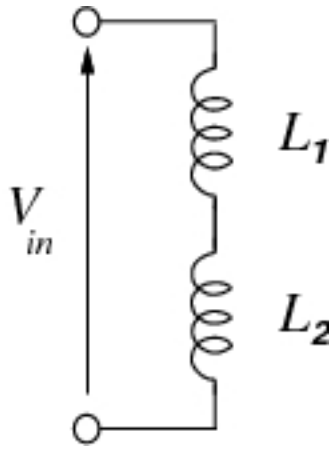

$$L_{eq} = L_1 + L_2$$

parallel combination

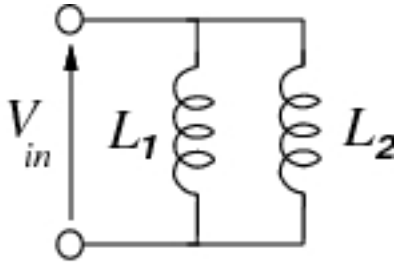

$$L_{eq} = \frac{1}{\frac{1}{L_1} + \frac{1}{L_2}}$$

Transformers

primary

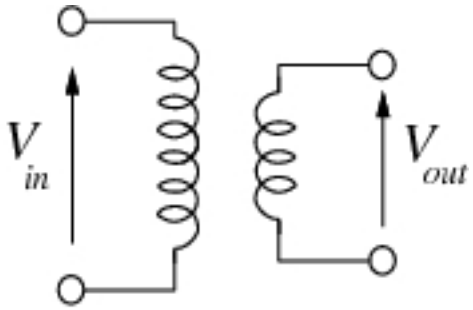

secondary

"*gearbox*"
for AC voltage and current

$V \sim \tau \qquad I \sim \omega$

constant power: VI $(\tau\omega)$

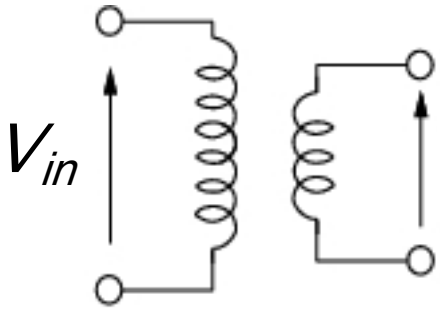

step-down:
less voltage
more current

6 : 3 η=6/3

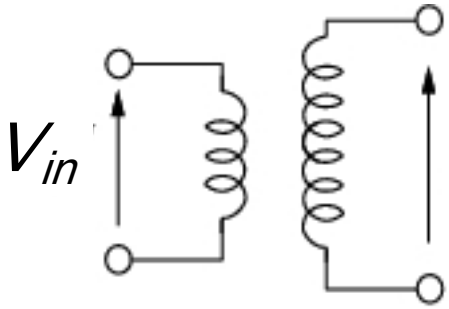

step-up:
more voltage
less current

3 : 6 η=3/6

- transformers are the main reason why AC power is used.
- often first stage for low voltage DC power

Switches

Switches are classified in terms of the number of *poles* and number of *throws*.

Common types are SPST DPDT SPDT, sometimes with center-off position.

Note that contacts *bounce* for about a millisecond after closing. This is noticeable to logic circuits, which can respond in nanoseconds.

SPST

SPDT

DPDT

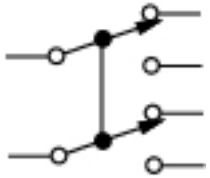

Relays

- electro-magnetically operated switches
- input behaves as an inductor with some loss (the energy required to operate the switch as well as the normal resistance)
- the output circuit behaves as a switch
- take milliseconds to operate
- can only manage a few million operations
- can take a lot of abuse, unlike electronic switches which can die from a very brief overvoltage.

TuteBot

a circuit, a chassis, a sensor, a battery, and two motors...

programmed by adjusting two potentiometers

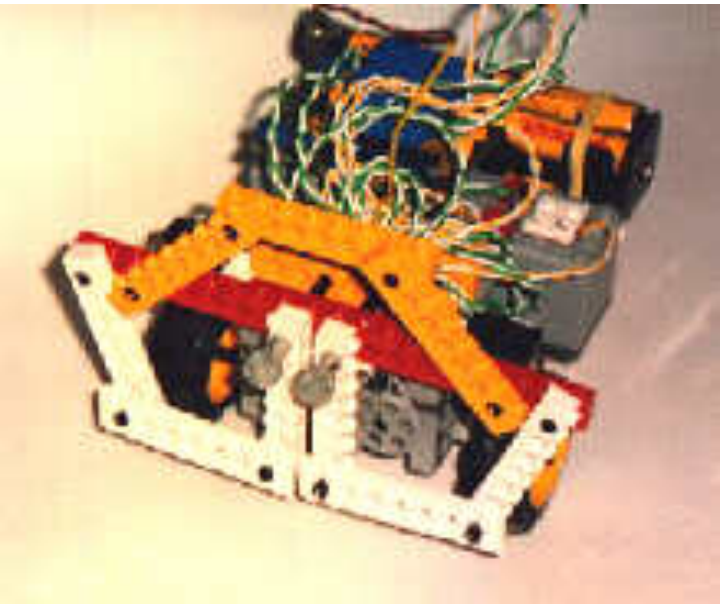

TuteBot

- diode D alleviates excessive voltage on collector when the field in the inductor collapses
- capacitor C2 smoothes voltage spikes from the motor
- with Vout(0) = 6V

$$V_{out}(t) = 6\ exp(\frac{-t}{RC})$$

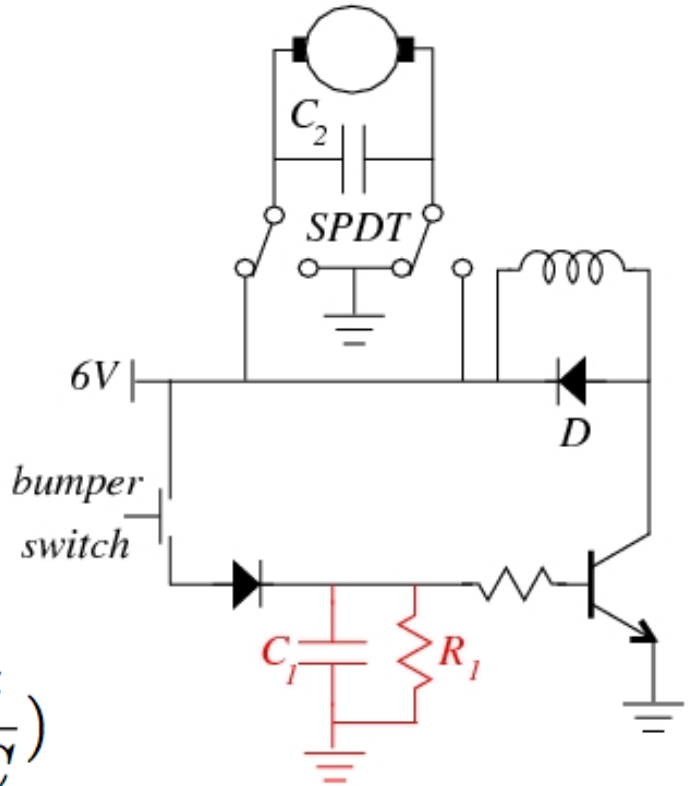

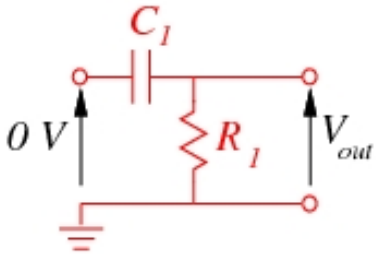

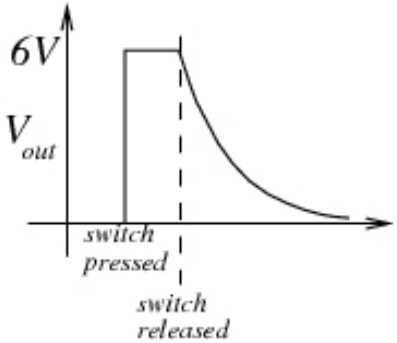

Laboratory Etiquette

- Respect for tools and materials
- Measure twice, cut once
- Please, do not hoard
- Clean your work area after you finish for the day
  - Return unused components to the place you got them
  - Turn off soldering irons/power supplies
- Breadboarding – only use breadboarding wires for breadboarding (not for final implementations), return to boxes when finished
- DIP sockets - potentiometers, DPDT switches
- SIP sockets - CdS photoresistors

Soldering

solder - a layer of *lead-tin alloy* with a relatively low melting point around a core of *flux* that cleans the junction with which to fix two conductors together in an intimate (low resistance) junction.

No - stainless steel, aluminum - they have an oxide coating
Yes - solid copper, “tinned” copper, brass, iron, most steels

heat up both surfaces to be joined to the melting point of the solder, feed a small amount of fresh solder from the reel into the joint

heat the joint with a **soldering iron**---set the temperature on your soldering station to 320 degrees Celcius---molten solder is hot enough to burn you.

solder *wets* the metal being joined---check the shape of the solder meniscus. If the solder forms a small spherical blob *on* the metal, the joint is a bad "dry" joint. If the surface of the solder is “sucked in” to the joint (concave), then you probably have a good joint.

Tips on Soldering

Metal surfaces must be clean. Remove dull (oxide) surfaces from copper (make the surface bright). Components (transistors, resistors) have thermal stress limits---beware overheating---use *sockets* and heat sinks (aluminum clamps) on the leads of a component to protect it by adding thermal mass during soldering. Typically only a few seconds of heat need to be applied to small joints.

Solid wire - easy to work with, but solid wires that flex will eventually fail by metal fatigue, giving rise to malfunctions that are hard/impossible to locate.

Thin gauge stranded wire - survives flexion much better. Twist and "tin" the end of the wire. Two such wires soldered together form a rigid joint. Confine bending to the part of the wire that is still stranded. Use heat shrink tubing to reinforce and insulate the joint.

Debugging

Check your work as you go!!! Bad joints mean intermittent circuit problems that are hard to find. Connect what you intended to connect and nothing else. Configure your multimeter to the continuity/diode check mode and check every joint as you make it and before applying power. Excessive current consumption by the circuit usually means there is a short.

Desoldering - A bad solder joint can be repaired by heating it up and using a solder suction device. Take care to avoid thermal stress limits when desoldering.

It's difficult to desolder multiple pin IC packages. Always put integrated circuits in sockets when making an experimental board. Sockets isolate ICs from thermal stresses and also make it easier to debug a board because you can check voltages before you install the chip or you can replace it if necessary.

Sockets and Connectors

Connectors are generally more costly to make and cause errors at a higher rate than other components of a circuit. Connectors should be unambiguous so that power and signal can not be mis-applied.

Our general purpose perforated boards are drilled with holes on 0.1" centers. Typically, we use male and female headers to connect to boards. Put female headers on the board, use male headers as plugs that fit into them.

Beautiful cabling - ribbon cables soldered to male headers, insulated and strain relieved using shrink tube, and polarized to fit into the female header.